AF200-AMBULANCE

CONTAINER

Model	NARMA Blood pack
Size	W 290 x L 450 x H 180 mm
Weight	3.8 kg

CERTIFICATION

Korea Ceritification (AF200)
European Conformity
Federal Communications Commission

HARDWARE

Drone Type	Electric dual tilt-rotor (eVTOL)
Size	W 1,750 x L 1,010 x H 520 mm
Payload / MTOW	3.8 kg / 23 kg (with batteries)
Propulsion	2 rotors during operation
Battery	4 Li-ion batteries (16,000 mAh each)
Avionics	2 GNSS systems, 2 Batteries 2 Magnetometers
Connectivity	1 Cellular data link (4G or 5G) 1 RF data & video link (5.8 GHz)

OPERATION

Flight Speed	around 75 km/s nominal cruise speed
Climb Speed	7.2 km/h climb, 5.4 km/h descent
Max. Speed	135 km/h
Flight Distance	40 km
Flight Time	35 min
Max. Altitude	3,000 m AMSL
Landing Accuracy	1.5 m (0.1 m with RTK-optional)
Operating °C	-5 ~ 40°C
Wind Resistnace	12 m/s average wind, 17 m/s gusts
Weather Limits	Operational in drizzle

MAJOR HOSPITAL

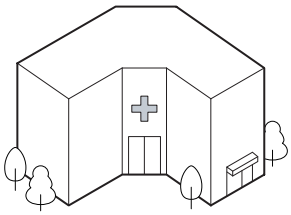

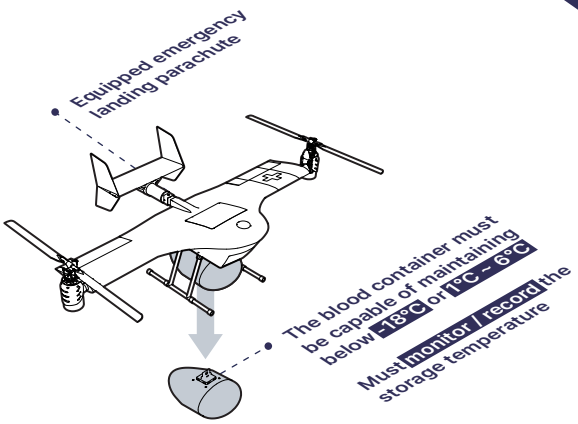

❶ Request emergency medication

BRANCH HOSPITAL

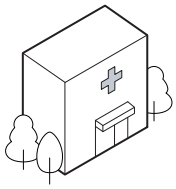

❷ Prepare the drone container and select the branch hopital

❸ Automatic flight

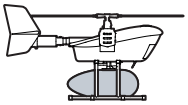

❹ Return flight

NARMA
Fly for People

www.narma.co.kr
+82 42 870 3650